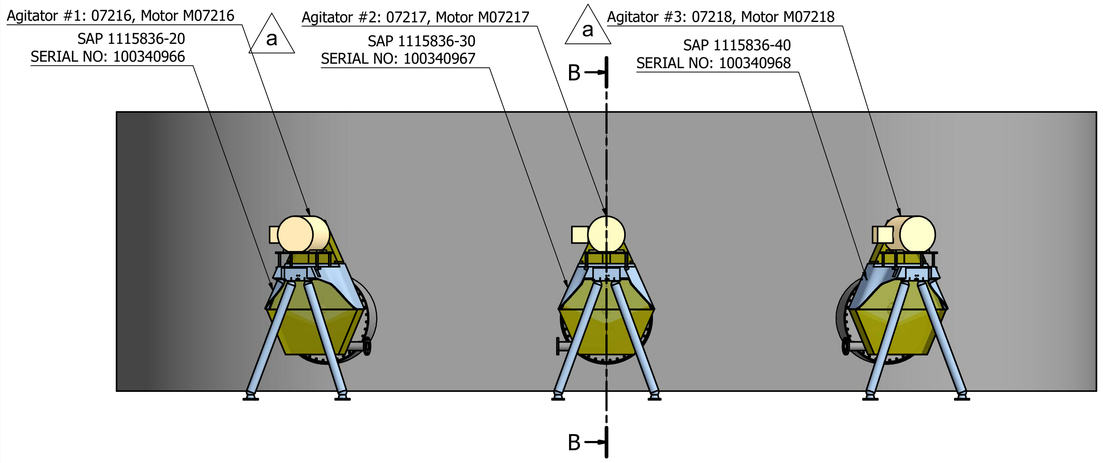

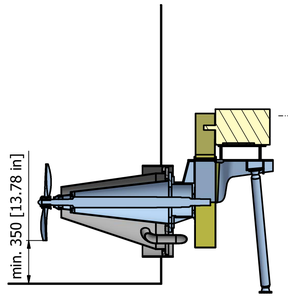

B-B (1 : 40)

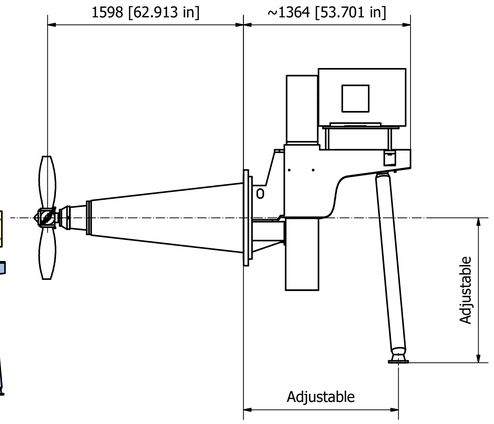

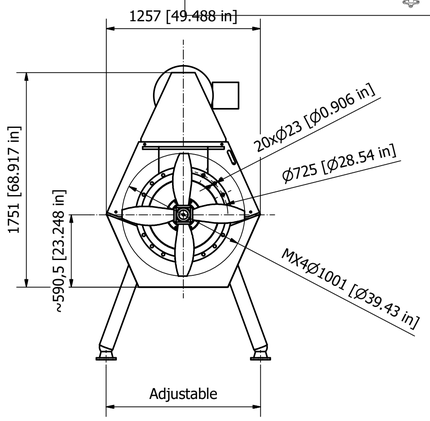

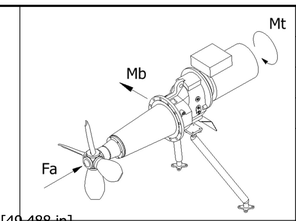

Agitator max loads	
Fa = 8,2	kN
Mb = 12	kNm
Mt = 1540	Nm
Agitator max weight without motor:	
1600	kg

Motor table	
IEC 200L55	
30	kW
1200	rpm
	V
60	Hz
	kg

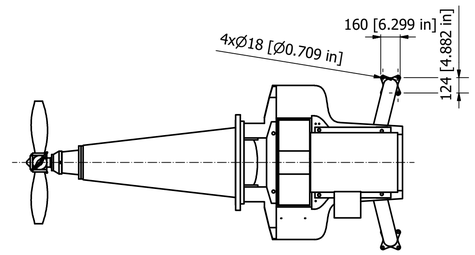

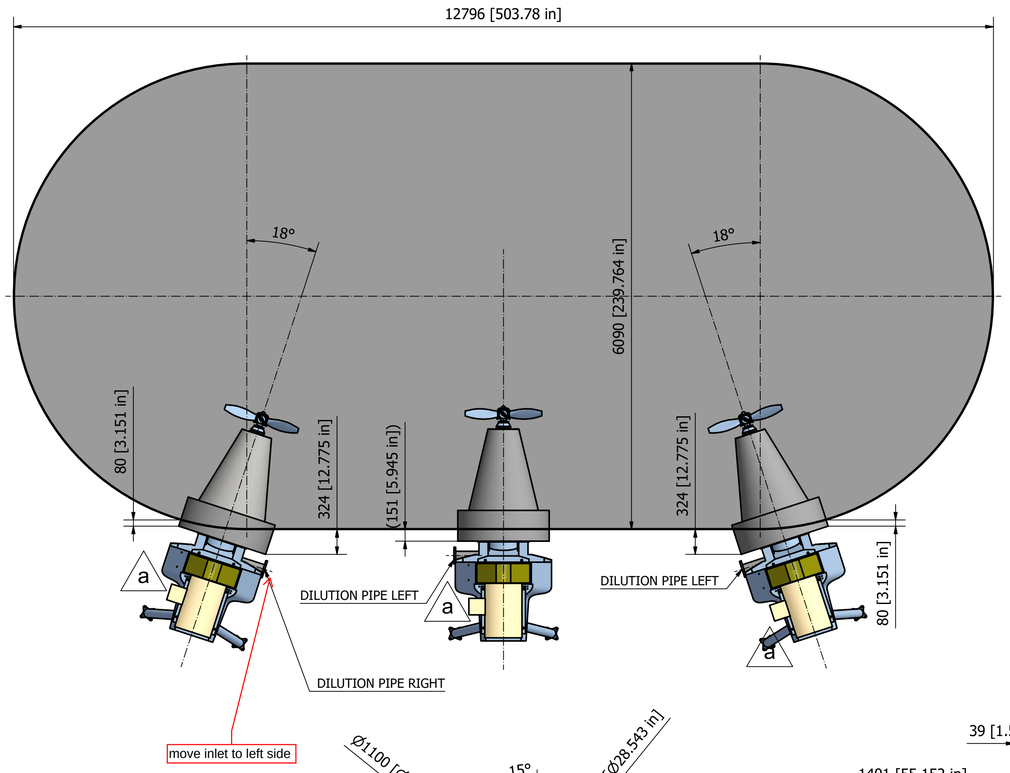

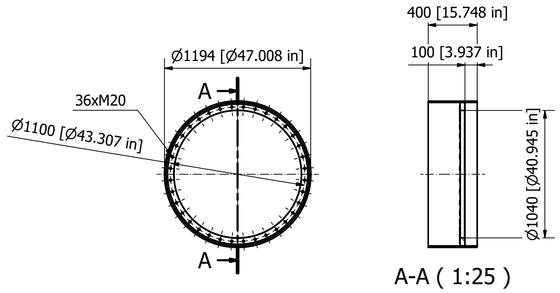

A-A (1:25)

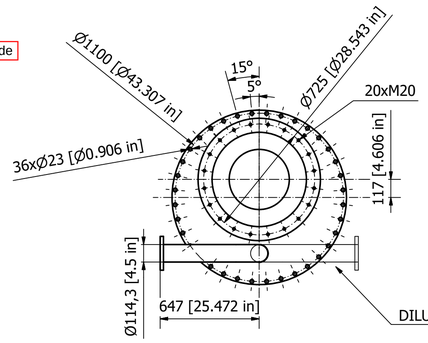

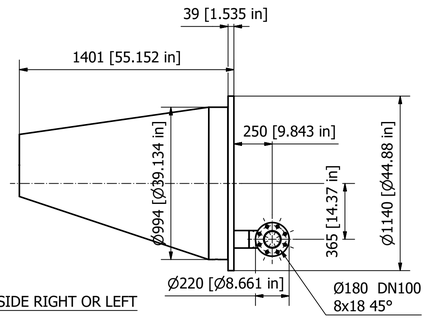

NOTES:

1. COLORS ARE NOT INTENDED TO REPRESENT "AS SHIPPED" PAINT REQUIREMENTS. THEY ARE FOR QUICK IDENTIFICATION OF PIPING AND EQUIPMENT.
2. PIPING AND EQUIPMENT ARE MODELED REPRESENTATIONS ONLY. ACTUAL LOCATION AND ORIENTATION MAY VARY PER SHOP STANDARDS, UNLESS OTHERWISE DIMENSIONED.

COPYRIGHT © (DATE OF DRAWING) SULZER PUMPS (FINLAND) OY. ALL RIGHTS RESERVED. NO PART OF THIS DRAWING MAY BE REPRODUCED, DISTRIBUTED OR TRANSMITTED IN ANY FORM OR ANY MEANS, ELECTRONIC OR MECHANICAL, INCLUDING PHOTOCOPYING AND RECORDING, WITHOUT THE EXPRESS PRIOR WRITTEN CONSENT OF SULZER PUMPS (FINLAND) OY.

Valmet
Resubmit
Reviewed With Comments
By Pierre Borduas on Nov 13, 2025
This review does not supersede requirements of purchase order, design drawings, specifications, codes or regulations. The contractor / supplier is not relieved from responsibility for errors or omission.

Valmet Doc ID: MF01005171

End User: GEORGIA PACIFIC
Application: GREEN LIQUOR DISSOLVING TANK
Customer PO No: POR543960
Equipment No: 07216, 07217, 07218

- ■ CERTIFIED FINAL
- ☐ CERTIFIED FOR NOZZLE & FOUNDATION ONLY
- ☐ PRELIMINARY ONLY

REV	MODIFICATION	NAME	DATE
a	Updated agitator 2, dilution pipe direction. Changed motor connection right	koponju	251030

SEP. PART LIST No | DESIGN GROUP SPFIN | CAD -DRAWING
REPLACED BY | SUBSTITUTE FOR | ORIGINAL SCALE

SLH-125

1115836

DIMENSIONAL DRAWING
MITTAPIIRROS
SI-1040 + Dilco
General Arrangement

DRAWN: 251003 koponju
CHECKED:
APPROVED:

SULZER | PART - No. 001 | EN | 304126768 | 1 / 1